SM-P355 REV0.3

BASE:[A5] SM-A500F/G/H/M REV07

2015.02.21

Samsung Confidential

sheet01 : RF PART
sheet02 : Connectivity PART
sheet03 : AP PART
sheet04 : PMIC PART
sheet05 : AUDIO, HOME KEY, SIDE KEY
sheet06 : LCD, TSP, CAM, SIM&SD, MOT
sheet07 : WACOM, SENSOR

Engineer			
Drawn By			
R&D CHK	TITLE SM-P355 REV0.3		Size A2
DOC CTRL CHK			
MFG ENGR CHK			
QA CHK	REV	Drawing Number	Sheet 0/8

Changed by | Date Changed

user45|ecad45|10.244.89.103|20150303-170555

SAMSUNG CONFIDENTIAL
THIS DOCUMENT CONTAINS CONFIDENTIAL PROPRIETARY INFORMATION THAT IS SAMSUNG ELECTRONICS CO.'S PROPERTY. DO NOT COPY, DISCLOSE OR DISTRIBUTE IN WHOLE OR IN PART WITHOUT THE EXPRESS WRITTEN AUTHORIZATION OF SAMSUNG.

1. RF_PART

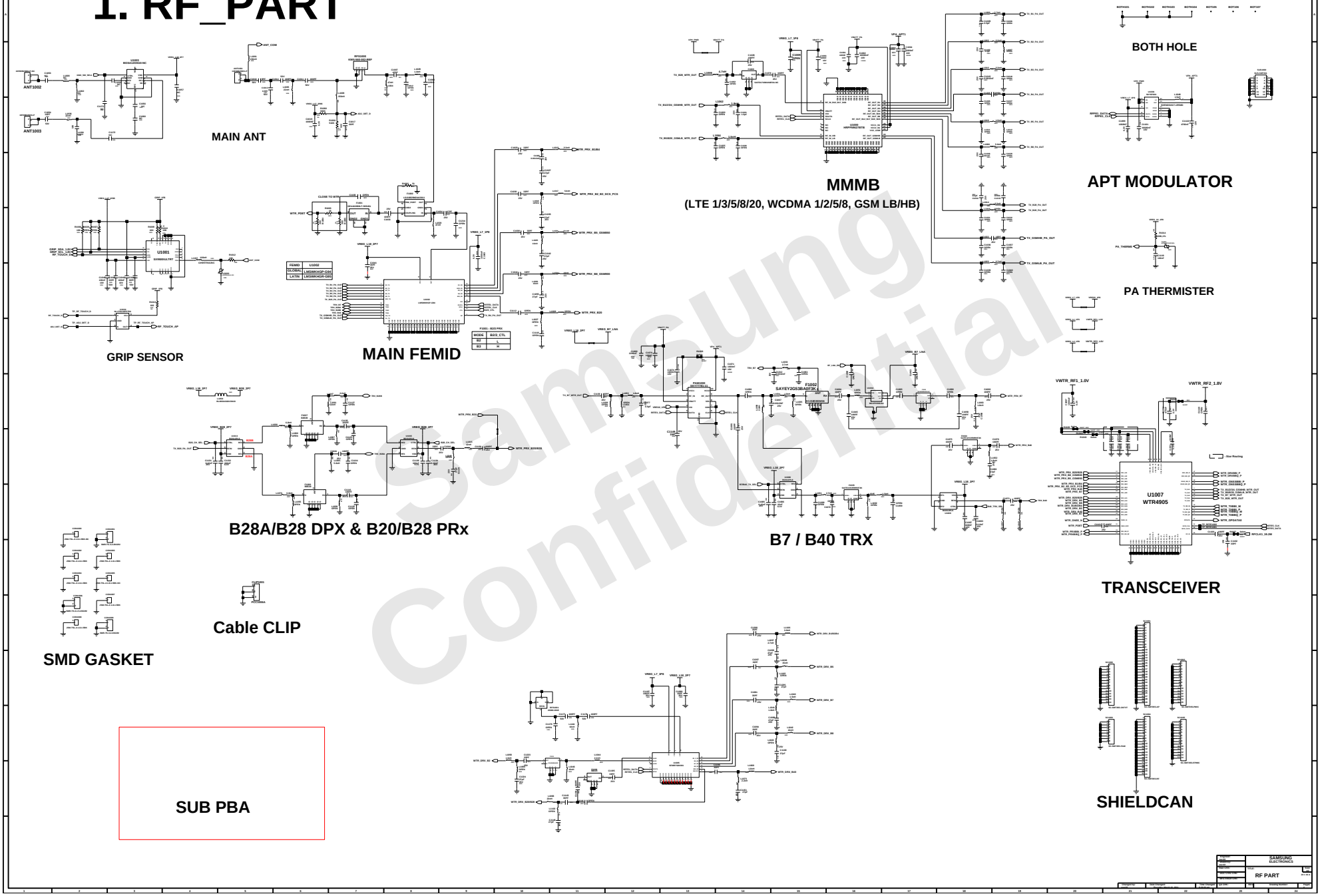

Samsung Confidential

user45|ecad45|10.244.89.103|20150303-170557

SAMSUNG CONFIDENTIAL
THIS DOCUMENT CONTAINS CONFIDENTIAL PROPRIETARY INFORMATION THAT IS SAMSUNG ELECTRONICS CO'S PROPERTY. DO NOT DISCLOSE TO OR DUPLICATE FOR OTHERS EXCEPT AS AUTHORIZED BY SAMSUNG.

2. CONNECTIVITY

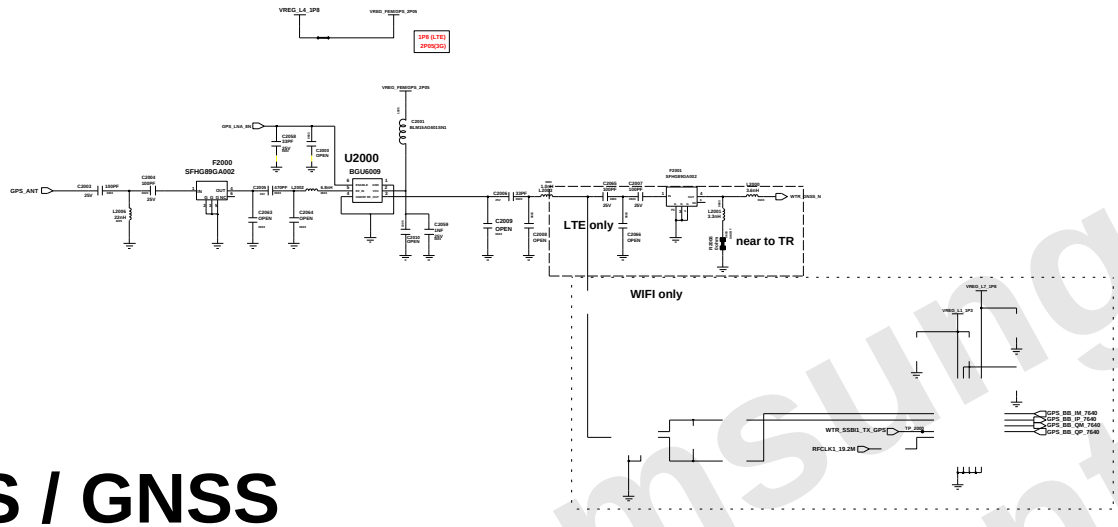

GPS / GNSS

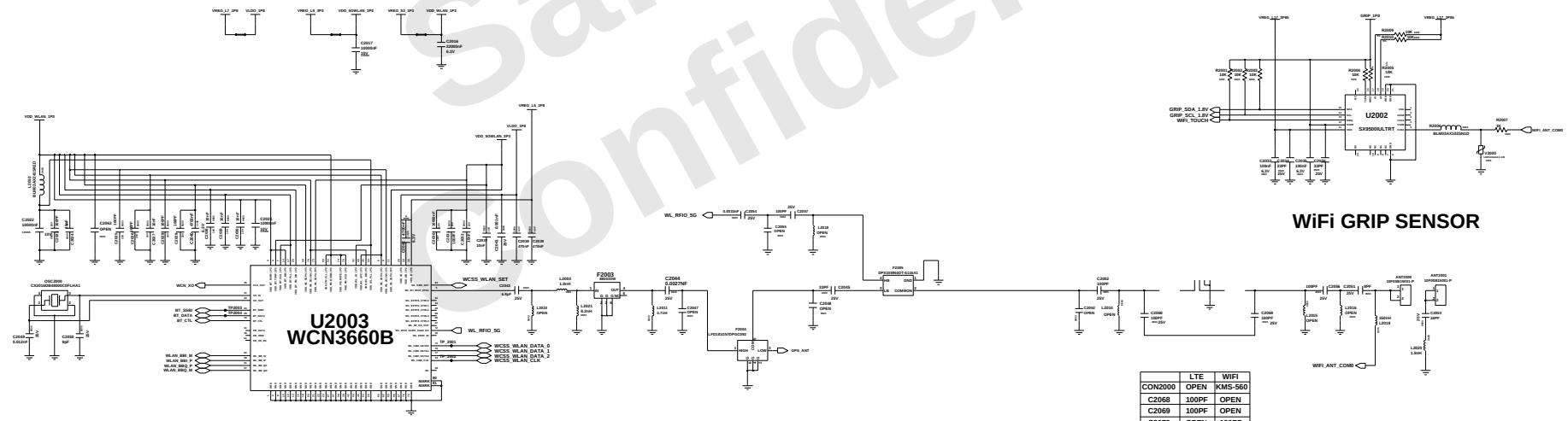

WiFi GRIP SENSOR

	LTE	WIFI
CON2000	OPEN	KMS-560
C2068	100PF	OPEN
C2069	100PF	OPEN
C2070	OPEN	100PF
C2071	OPEN	100PF

BT/WIFI ANT

Engineer	SAMSUNG ELECTRONICS	
Drawn by:		
Reg Chk:	TITLE: Connectivity PART	Size: A3
DOC CTRL Chk:		
MFG ENGR Chk:		
Changed by:	Date Changed:	Time Changed:
QA Chk:	Drawing Number	2/8

Samsung Confidential

SAMSUNG CONFIDENTIAL
THIS DOCUMENT CONTAINS SAMSUNG PROPRIETARY INFORMATION THAT IS SAMSUNG ELECTRONICS CO'S PROPERTY. DISCLOSURE TO THIRD PARTIES IS PROHIBITED EXCEPT AS AUTHORIZED BY SAMSUNG.

3. AP PART (MSM8916)

Solder Bridge

	LTE	WIFI
R3006	Short	OPEN
R3007	OPEN	Short
R3008	OPEN	Short
R3010	Short	OPEN
R3011	OPEN	Short
R3012	Short	OPEN
R3074	OPEN	Short
R3075	OPEN	Short
R3076	Short	OPEN
R3077	Short	OPEN

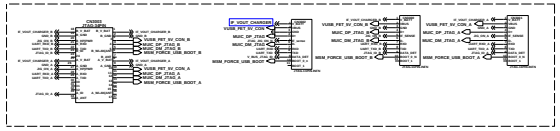

PCB JTAG

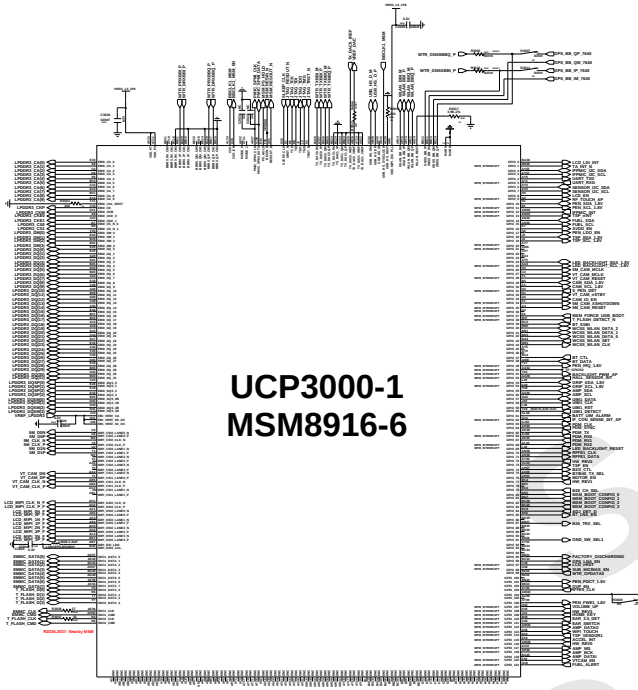

UCP3000-1
MSM8916-6

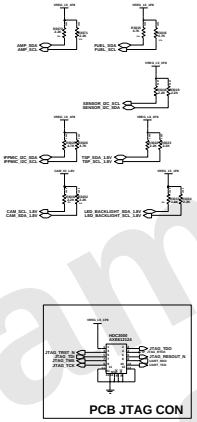

PCB JTAG CON

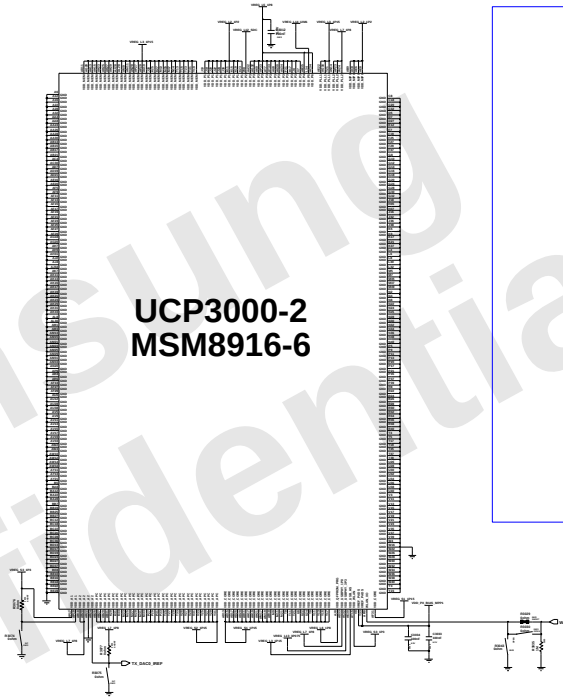

UCP3000-2
MSM8916-6

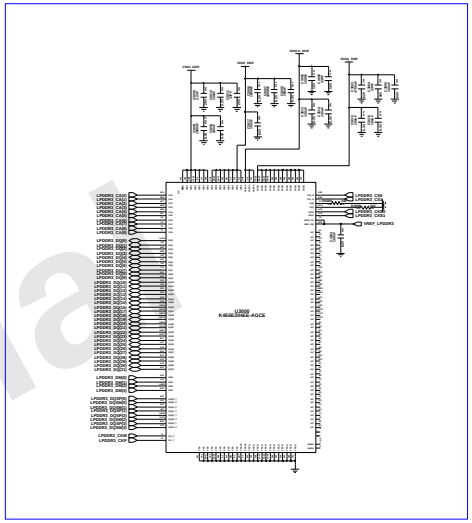

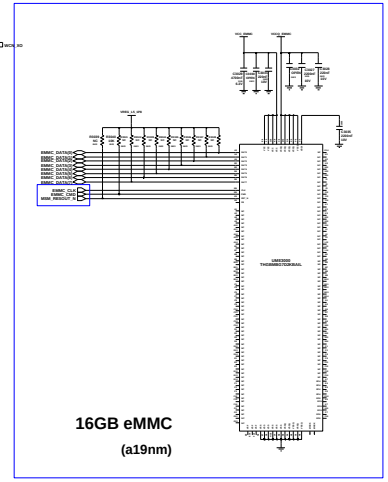

16GB eMMC
(a19nm)

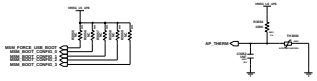

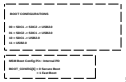

HW REVISION

HW TDS/LTE/BL/PIN	
0000	Bringup
0001	PRE-DV
0010	REV0.0
0011	REV0.1
0100	REV0.2
0100	REV0.3

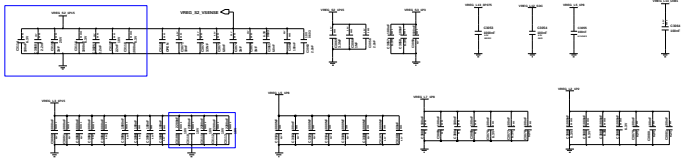

Samsung Confidential

SAMSUNG ELECTRONICS
AP PART

SAMSUNG CONFIDENTIAL
THIS DOCUMENT CONTAINS CONFIDENTIAL PROPRIETARY INFORMATION THAT IS SAMSUNG ELECTRONICS CO'S PROPERTY. DO NOT DISCLOSE TO OR DUPLICATE FOR OTHERS EXCEPT AS AUTHORIZED BY SAMSUNG.

4. PMIC PART

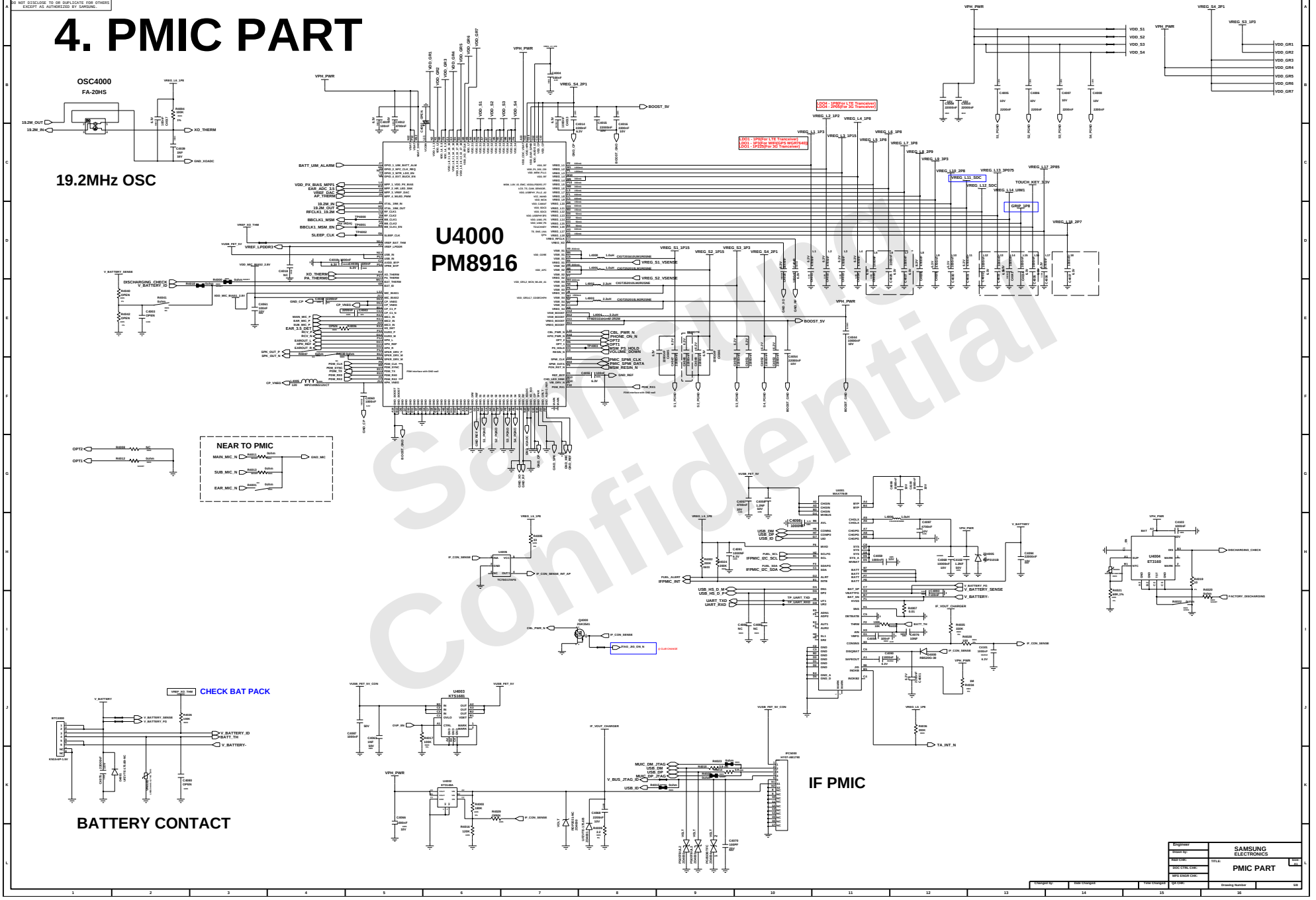

Samsung Confidential

SAMSUNG CONFIDENTIAL
THIS DOCUMENT CONTAINS CONFIDENTIAL INFORMATION PROPRIETARY TO SAMSUNG ELECTRONICS CO'S PROPERTY. DO NOT DISCLOSE TO OR DUPLICATE FOR OTHERS EXCEPT AS AUTHORIZED BY SAMSUNG.

AUDIO PART

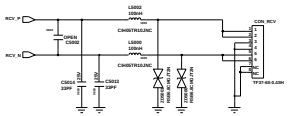

RCV CONTACT

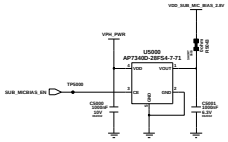

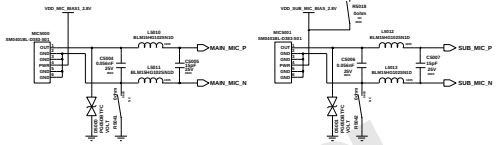

MAIN MIC

SUB MIC

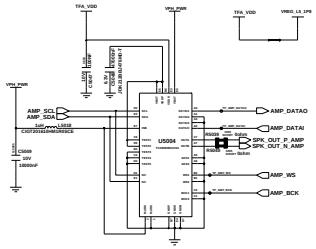

Audio AMP

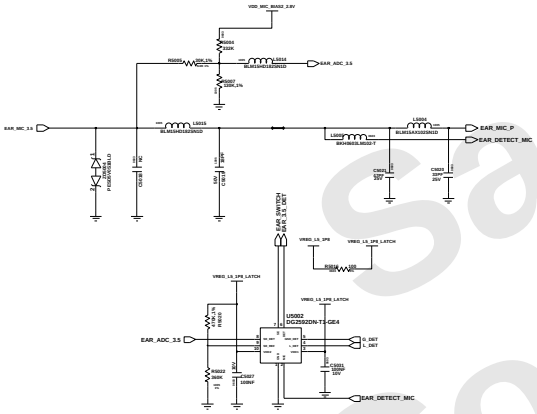

E/J DET IC

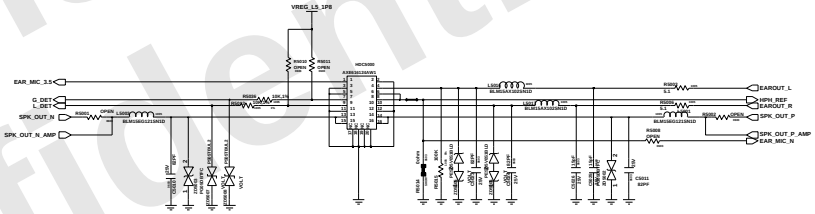

Earjack

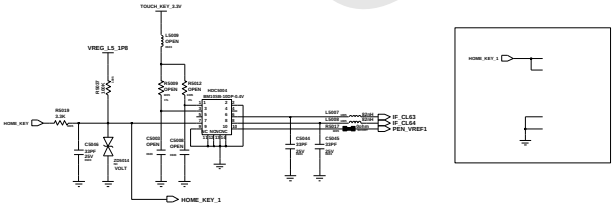

Home KEY & KEY LED Conn

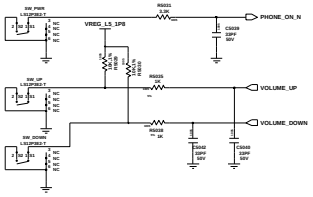

POWER & VOLUME KEY

Samsung Confidential

Engineer	SAMSUNG ELECTRONICS
Issue No	
R&D CHK	TITLE: AUDIO, HOME KEY, SIDE KEY
DOC CTRL CHK	
MFG ENGR CHK	
QA CHK	Drawing Number / 6/8

Changed By	Date Changed	Time Changed

SAMSUNG CONFIDENTIAL
THIS DOCUMENT CONTAINS CONFIDENTIAL
PROPRIETARY INFORMATION THAT IS
SAMSUNG ELECTRONICS CO'S PROPERTY.
DO NOT DISCLOSE TO OR DUPLICATE FOR OTHERS
EXCEPT AS AUTHORIZED BY SAMSUNG.

CAMERA PART

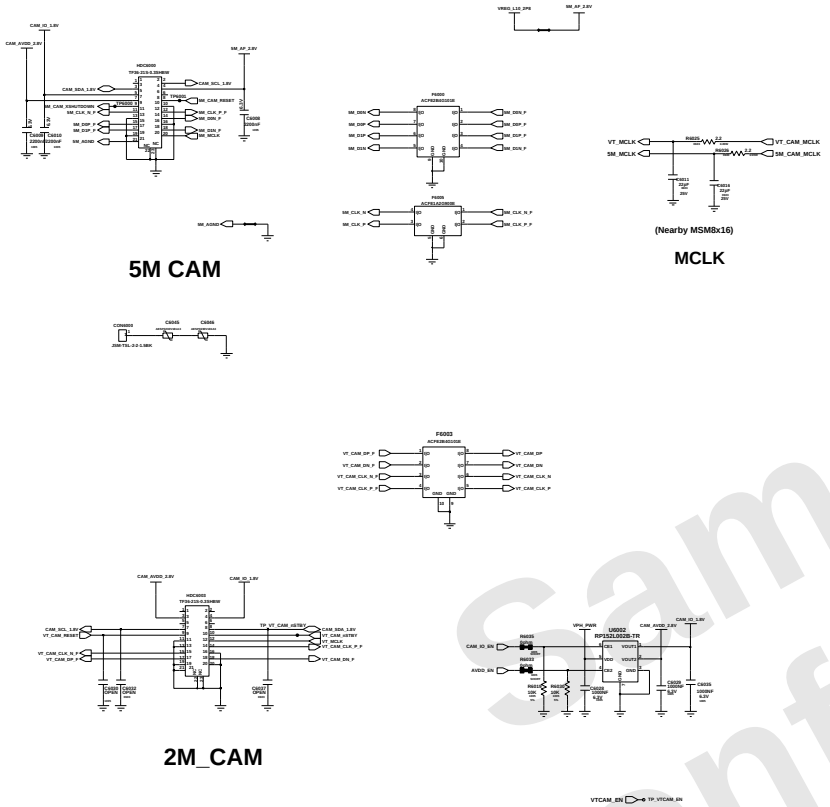

DISPLAY PART

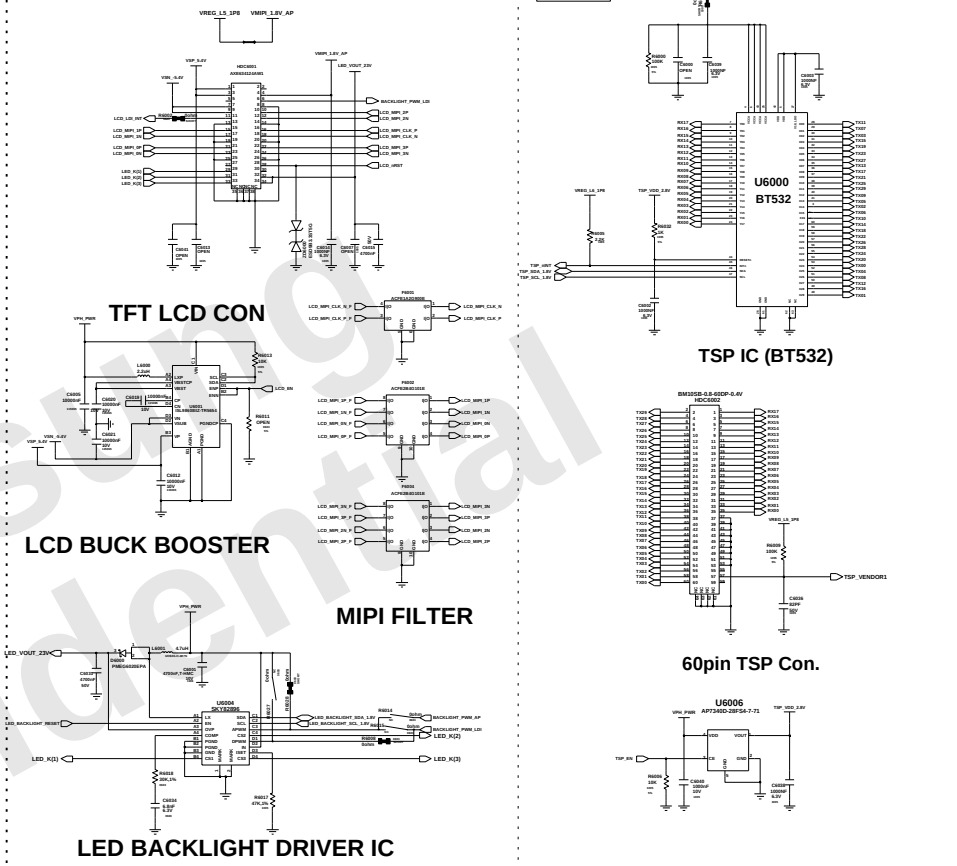

SIM / SD CARD PART

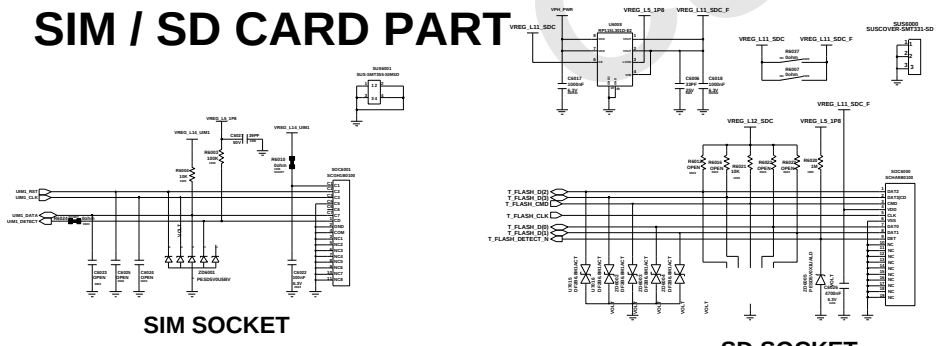

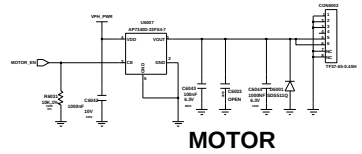

Samsung Confidential

Engineer:	SAMSUNG ELECTRONICS
Drawn by:	
R&D CHK:	TITLE: LCD, TSP, CAMERA, SIM&SD, MOT
DOC CTRL CHK:	
MFG ENGR CHK:	
Changed by:	Date Changed:
Time Changed:	QA CHK:
REV:	Drawing Number:

SAMSUNG CONFIDENTIAL
THIS DOCUMENT CONTAINS CONFIDENTIAL
PROPRIETARY INFORMATION THAT IS
SAMSUNG ELECTRONICS CO'S PROPERTY.
DO NOT DISCLOSE TO OR DUPLICATE FOR OTHERS
EXCEPT AS AUTHORIZED BY SAMSUNG.

WACOM

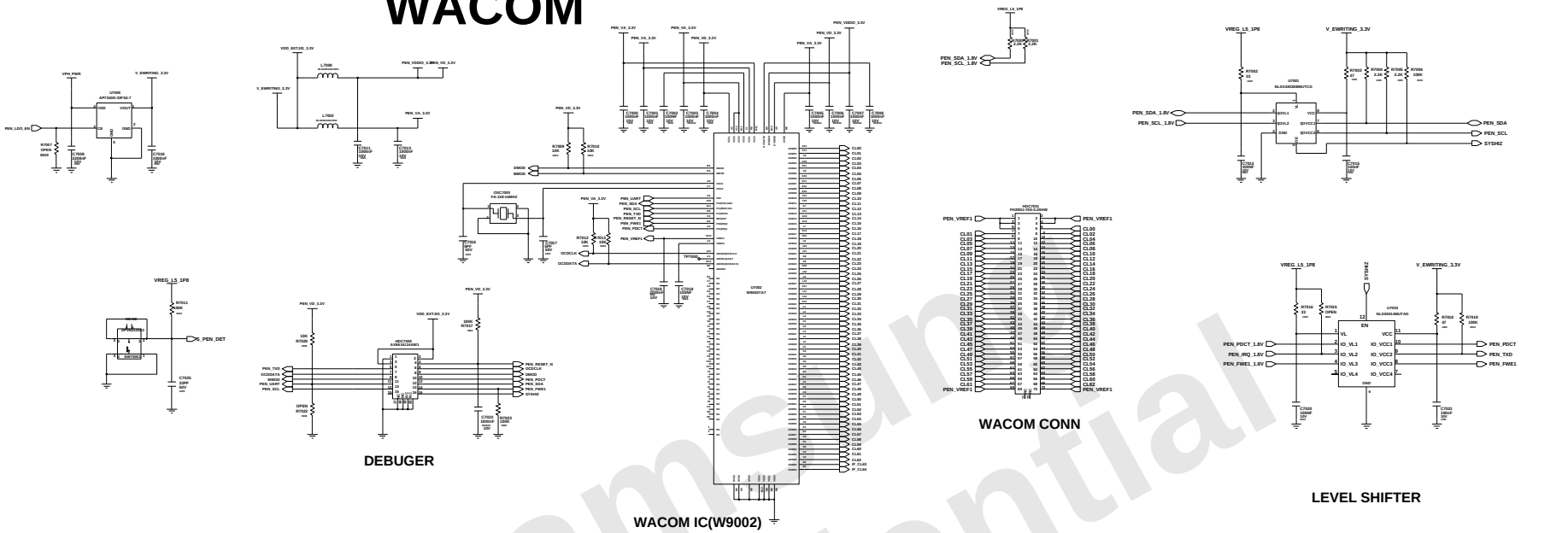

SENSOR

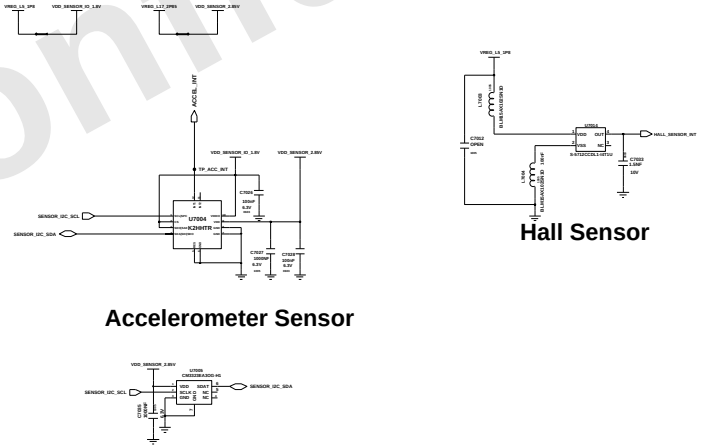

Samsung Confidential

Engineer	SAMSUNG ELECTRONICS
Drawn by:	
R&D CHK:	TITLE: WACOM,SENSOR,IRDA(Option)
DOC CTRL CHK:	Size: A3
MFG ENGR CHK:	
Changed by: / Date Changed: / Time Changed: / QA CHK:	Drawing Number: 6/8

Setup(2015-02-09)_HHP.caps

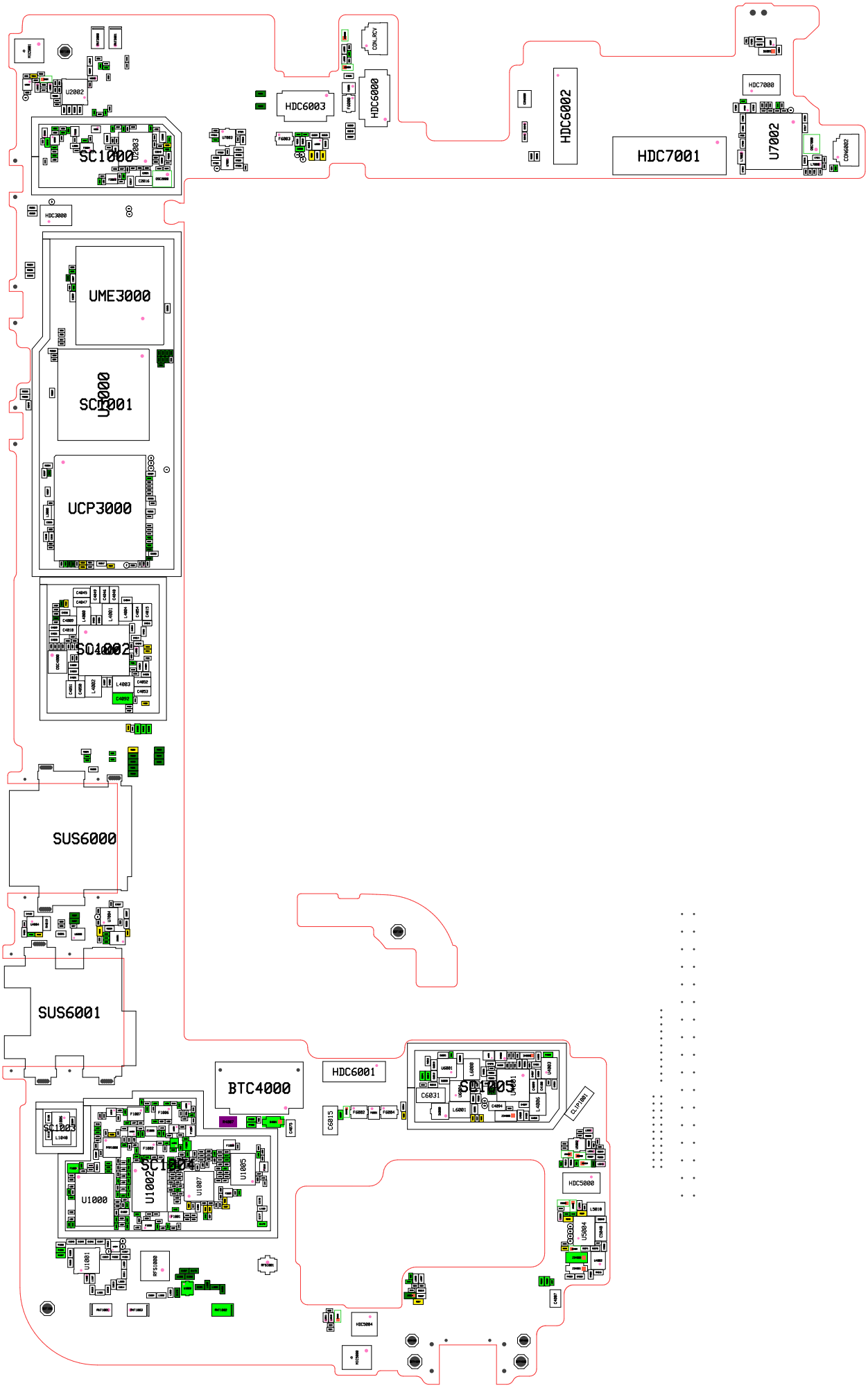

2007-010856(R4007) : Check! Bottom Surface of Component

Setup(2015-02-09)_HHP.caps

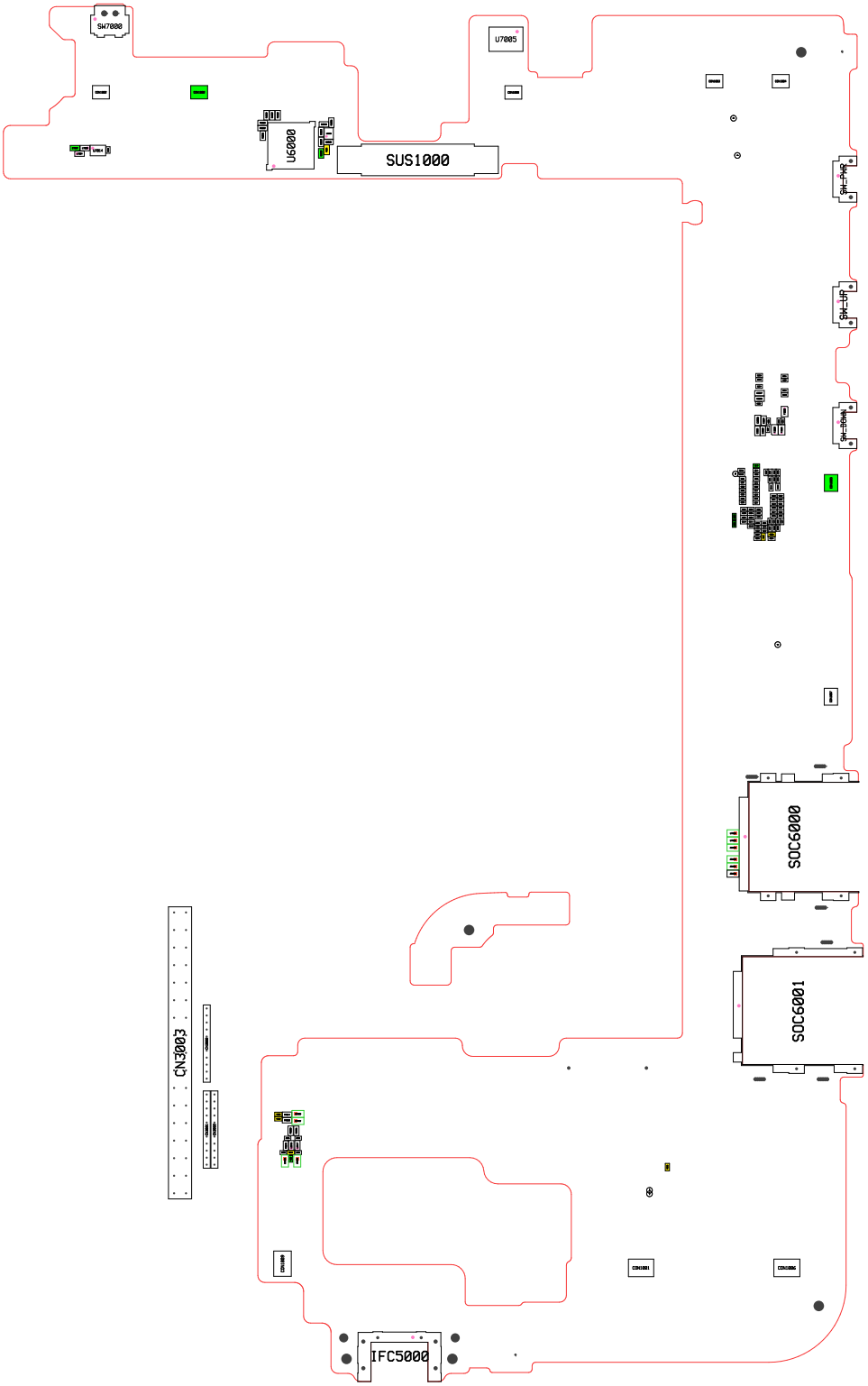

2007-010856(R4007) : Check! Bottom Surface of Component